INSTRUCTION MANUAL

Virginia FL Sanded Black Outdoor
98364

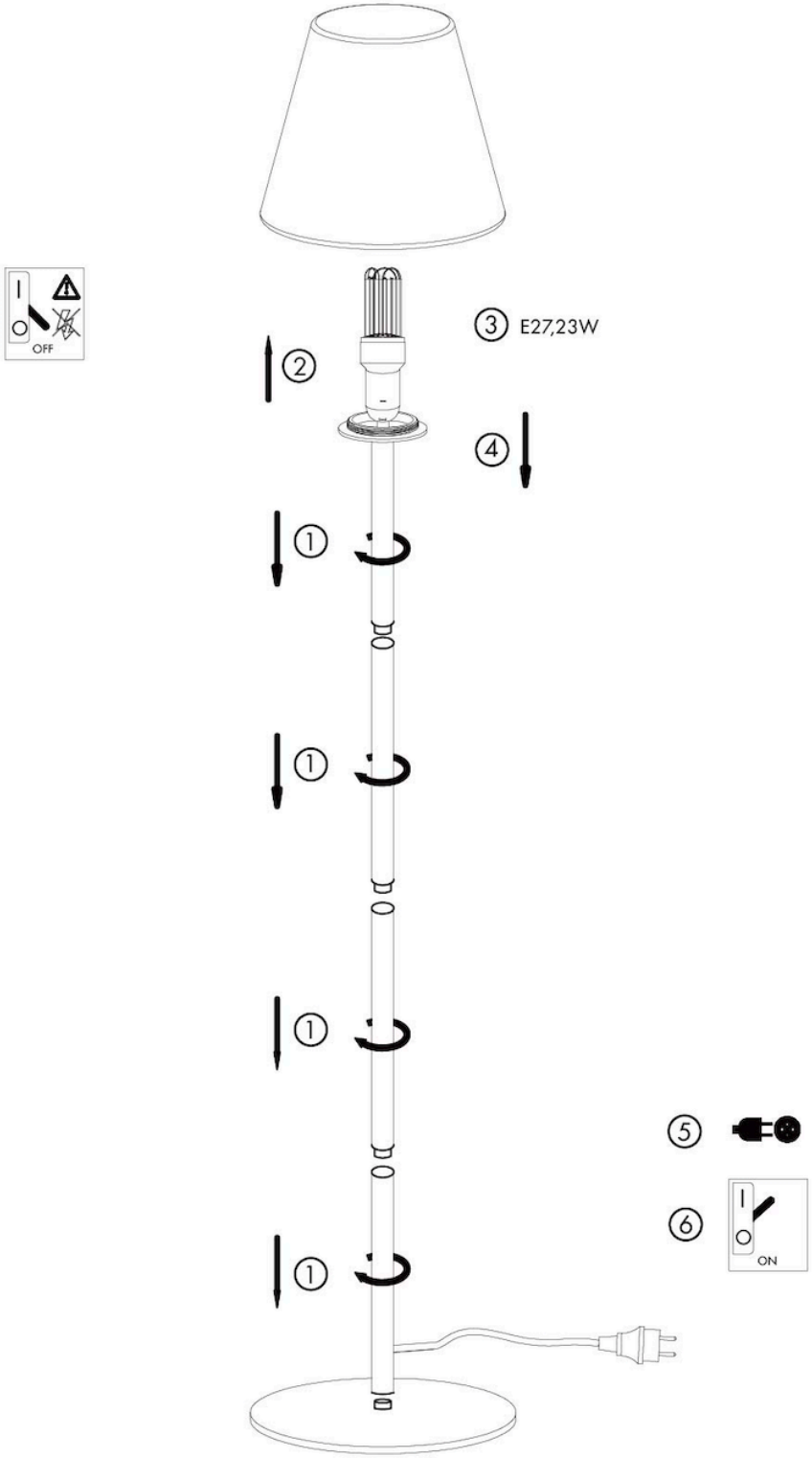

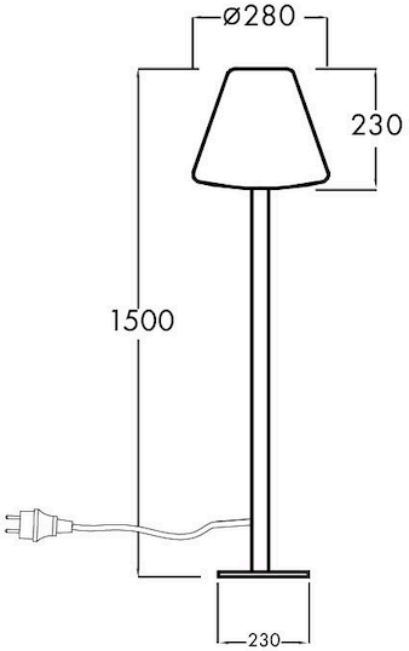

QAZQA

WWW.QAZQA.COM