# INSTRUCTION MANUAL

220~240V
50Hz

Max.ø 100mm
E27
1xMax.60W

IP20

Simplo FL + Lampshade 40/40/40

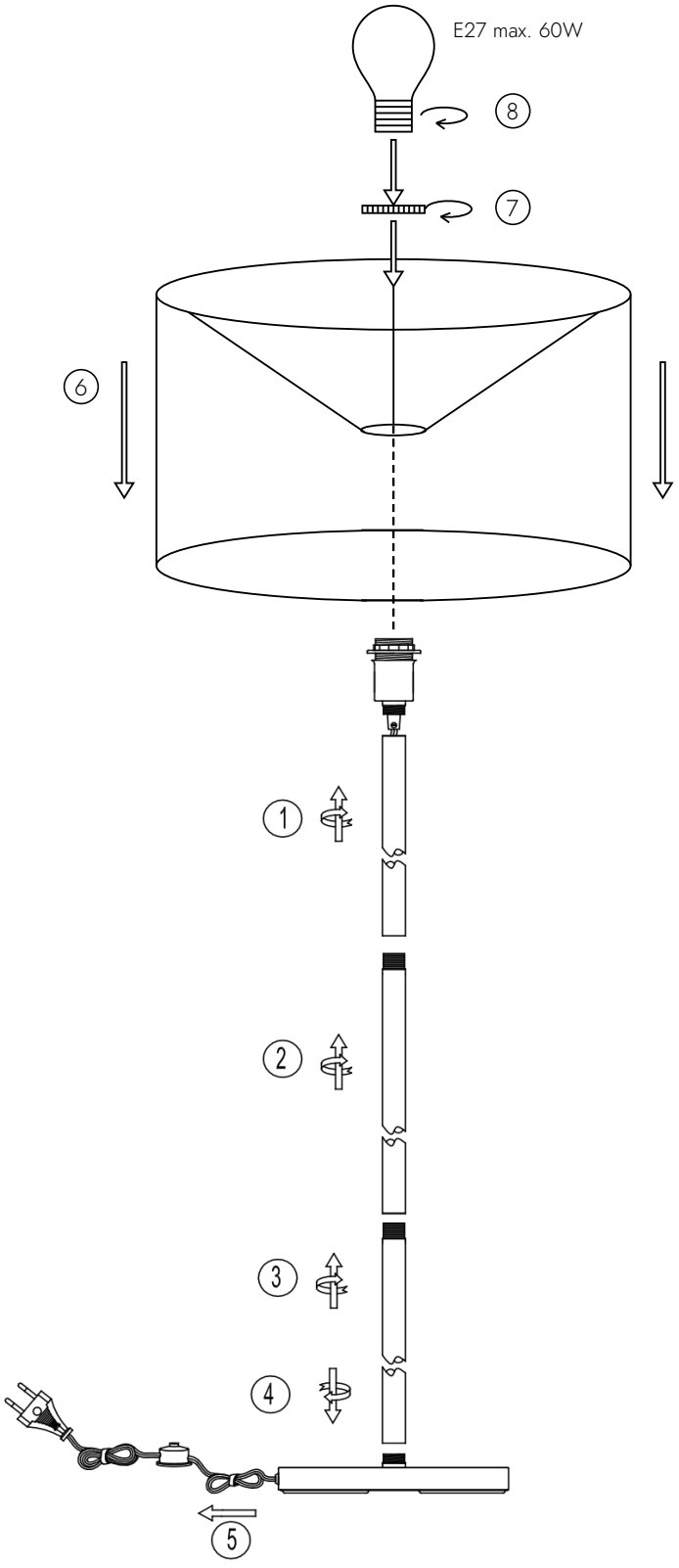


QAZQA

WWW.QAZQA.COM

# SAFETY INSTRUCTION

Please study the instruction manual and below information carefully before installing or using this product.
Please keep this user manual for further reference

1. The luminaires may only be installed by authorized and qualified technicians according the valid regulations for electrical installation.
2. Maintenance of the luminaires is limited to their surfaces. During maintenance no moisture can come into contact with any areas of the terminal connections or voltage control parts.
3. The electrical supply must be switched off at the outset, preferably by means of a switch in the distribution box, before any installation, maintenance or repair work is undertaken.
4. Exterior lighting must not be installed during rain.
5. Take account of the minimal separation distance from other objects and the room required around the fitting.
6. If in any doubt, consult a professional, taking local installation requirements into account. Some countries stipulate that lighting may be installed only by registered installers.
7. Clamping screws in electrical connections must be adequately tightened. This is particularly the case with 12V low voltage conductors.
8. When replacing a halogen lamp, wait for it to cool, for a minimum of 5 minutes.
9. Clean with a clean, dry cloth or brush, use no solvents or abrasives. Avoid dampness on all electrical components
10. Take account of all available technical information.
11. Take note of the symbols when connecting wires:
    **N** = Neutral **L** = Live ⏚ = Earth
12. Meaning of symbols:


For indoor use only, where direct contact with water is impossible



This icon indicates the level of water-proof and dust-proof


Protection Class I: the fitting must be earthed


Protection Class II: the fitting is doubled insulated and does not require earthing



Protection Class III: the fitting is low voltage



Minimum distance from lighted objects (meters)


Only the self-shielded halogen lamp should be used with the luminaire



Strip the wire to the indicated length (mm);different items require different length



Connect using the specified cable; different items require different cables



The type of lamp and maximum size and wattage indicated in each lighting unit must not be exceed; different items require different kind of light sources with different bulb icons



The armature is designed to work only with the indicated voltage. Different items require different working voltage.


The luminaire can be used in combination with a dimmer



The luminaire can be dimmed by wall switch



The reference light angle and light space of the luminaire



This luminaire cannot be disposed together with normal domestic waste in standard rubbish can, but you have to bring it to a staging area for electrical waste

**FittinQ B.V.**
Smaragdweg 52, 5527 LB Hapert, The Netherlands
www.qazqa.nl

QAZQA