INSTRUCTION MANUAL

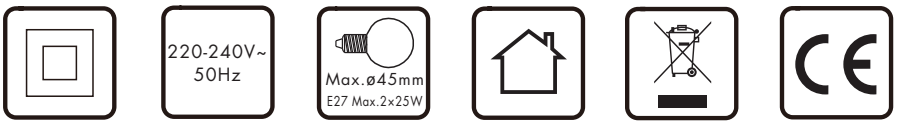
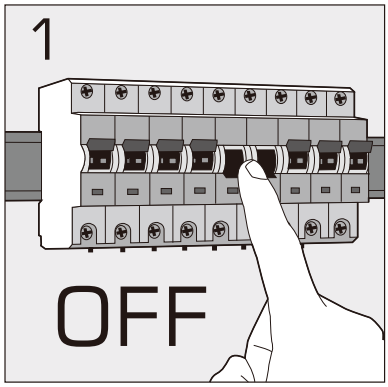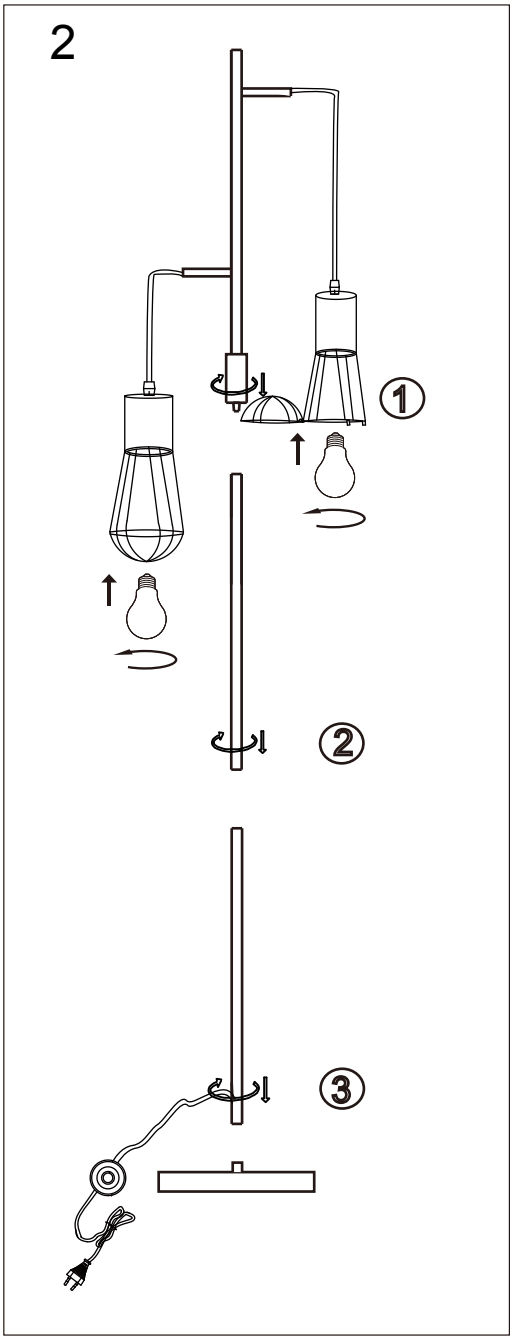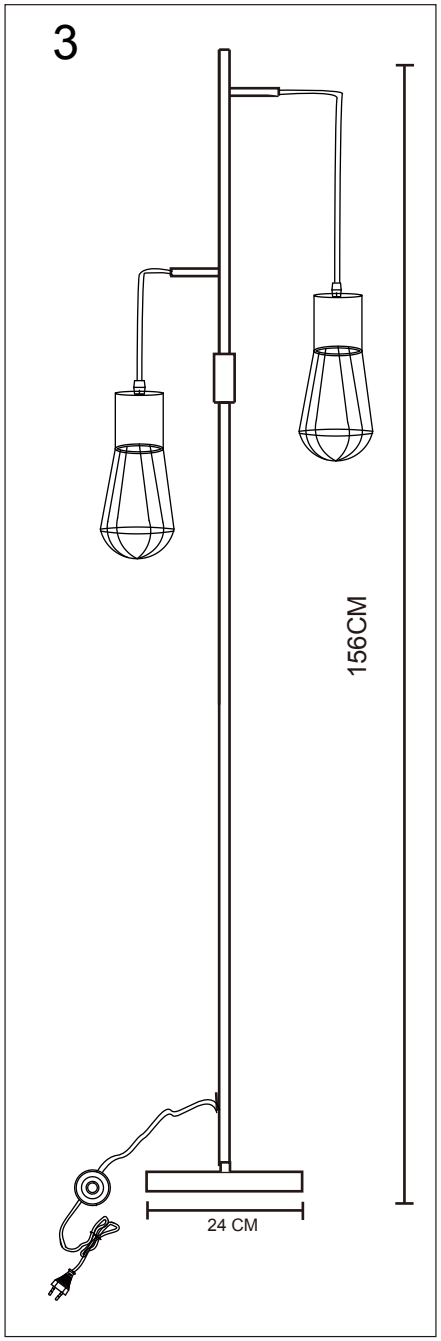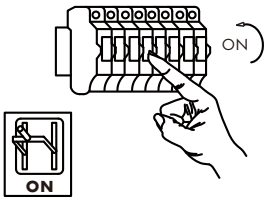
Edison FL 2 Concrete and Black
97911