INSTRUCTION MANUAL

Check WL LED Satin 94111

1.

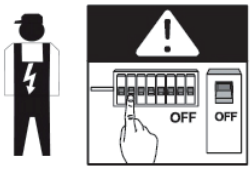

2.

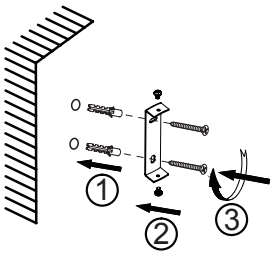

3.

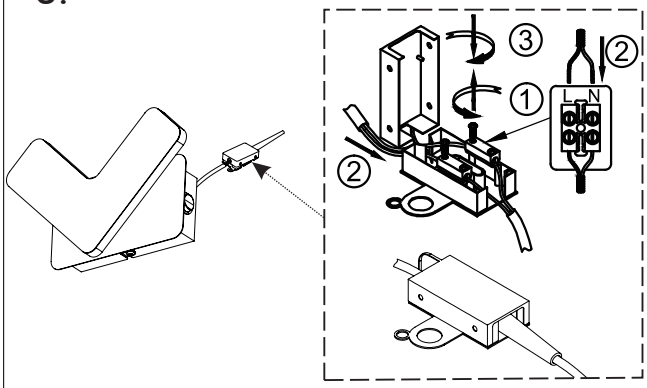

4.

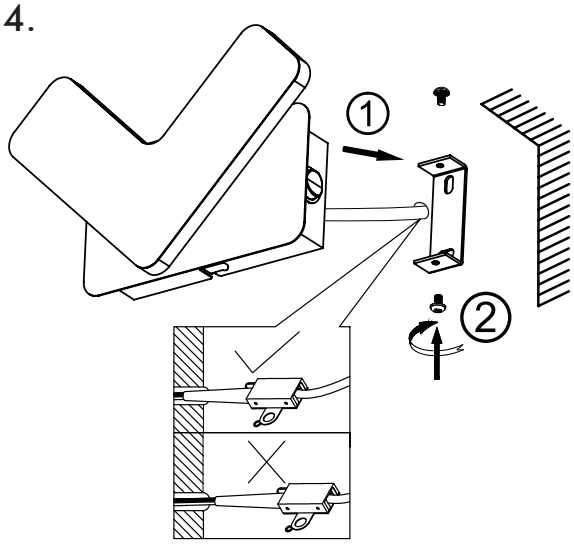

7.

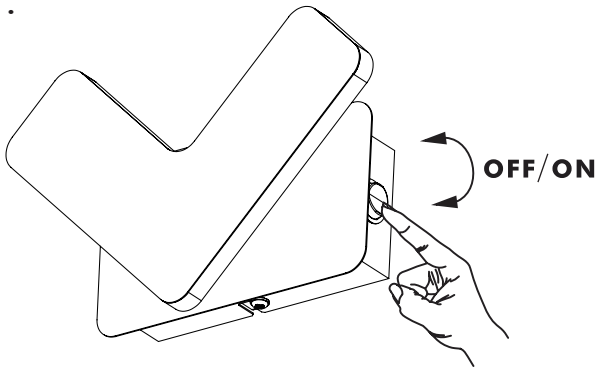

5.

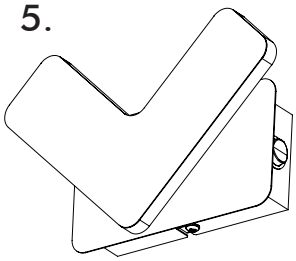

WALL LAMP
incl.QL7001149
0.8x1260lm Module
480lm Lamp
0.8x12W Lamp
6W Lamp
230V~50Hz
2700K
CRI>80
30000 h
15000 ON/OFF

6.

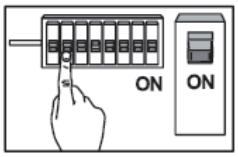

Overall size:

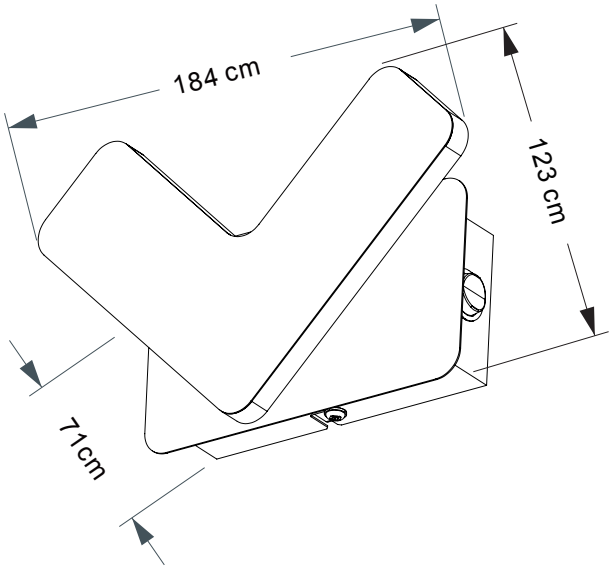

FittinQ B.V.
Smaragdweg 52, 5527 LB Hapert, The Netherlands
www.qazqa.nl

QAZQA

94111

0.8x12W LED Module
incl. LED Board: QL7001149
220-240V~50Hz

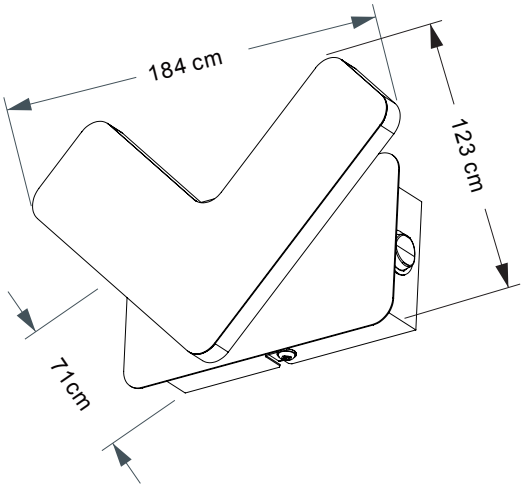

	QR	EAN
(DE) Dieses Produkt enthält eine Lichtquelle der Energieeffizienzklasse F **(EN)** This product contains a light source of energy efficiency class F **(FR)** Ce produit comprend une source de lumière de classe d'efficience énergétique F **(NL)** Dit product bevat een lichtbron van energie-efficiëntieklasse F **(PL)** Produkt ten zawiera źródło światła o klasie efektywności energetycznej F **(NO)** Dette produktet inneholder en lyskilde i energieffektivitetsklasse F **(DK)** Dette produkt indeholder en lyskilde af energieffektklasse F **(SE)** Denna produkt innehåller en ljuskälla i energieffektivitetsklass F **(FI)** Tämä tuote sisältää energiatehokkuusluokan F valonlähteen **(IT)** Questo prodotto contiene una sorgente luminosa della classe di efficienza energetica F **(ES)** Este producto contiene una fuente de luz de la clase de eficiencia energética F **(CZ)** Tento výrobek obsahuje světelný zdroj třídy energetické účinnosti F **(PT)** Este produto contém uma fonte de luz da classe de eficiência energética F **(GR)** Αυτό το προϊόν περιέχει μια φωτεινή πηγή ενεργειακής απόδοσης κλάσης F **(SK)** Tento výrobok obsahuje zdroj svetla triedy energetickej efektivity F		**8718881058424**

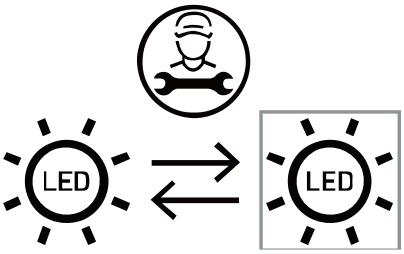	**(DE)** Durch einen Fachmann austauschbare Lichtquelle (nur LED) **(EN)** Replaceable (LED only) light source by a professional. **(FR)** Source de lumière remplaçable (LED uniquement) par un professionnel. **(NL)** Lichtbron (alleen led) te vervangen door een professional. **(PL)** Wymienne (tylko LED) źródło światła wykonane przez profesjonalistę. **(NO)** Utskiftbar (kun LED) lyskilde av en profesjonell. **(DK)** Udskiftelig lyskilde (kun LED), udskiftes af en elektriker. **(SE)** Ljuskälla (endast LED) utbytbar genom fackman. **(FI)** Ammattilainen voi vaihtaa vaihdettavan (vain LED) valonlähteen. **(IT)** Sorgente luminosa (solo LED) sostituibile da un professionista.I **(ES)** Fuente de luz (solo LED) sustituible por un profesional. **(CZ)** Vyměnitelný (pouze LED) světelný zdroj odborníkem. **(PT)** Luz LED (apenas LED) substituível por um profissional. **(GR)** Η πηγή φωτός (μόνο LED) να αντικαθίσταται από επαγγελματία. **(SK)** Zdroj svetla (iba LED) vymeniteľný prostredníctvom odborníka.

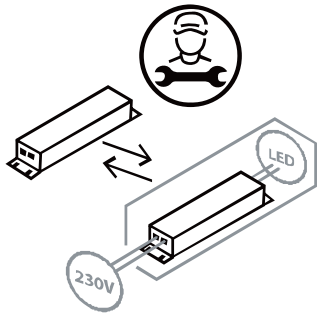	**(DE)** Durch einen Fachmann austauschbares Betriebsgerät. **(EN)** Replaceable control gear by a professional. **(FR)** Contrôleur remplaçable par un professionnel. **(NL)** Voorschakelapparatuur te vervangen door een professional. **(PL)** Wymienny układ sterujący przez profesjonalistę. **(NO)** Utskiftbar kontrollutstyr av en profesjonell. **(DK)** Udskiftelig igangsætter, udskiftes af en elektriker. **(SE)** Styrdon utbytbart genom fackman. **(FI)** Ammattilainen voi vaihtaa vaihdettavat ohjauslaitteet. **(IT)** Dispositivo di controllo sostituibile da un professionista. **(ES)** Dispositivo de control sustituible por un profesional. **(CZ)** Vyměnitelný předřadník odborníkem. **(PT)** Dispositivo de controlo substituível por um profissional. **(GR)** Ο εξοπλισμός ελέγχου να αντικαθίσταται από επαγγελματία. **(SK)** Predradník vymeniteľný prostredníctvom odborníka.

FittinQ B.V.
Smaragdweg 52, 5527 LB Hapert, The Netherlands
www.qazqa.nl

QAZQA

SAFETY INSTRUCTION

Please study the instruction manual and below information carefully before installing or using this product.
Please keep this user manual for further reference

1. The luminaires may only be installed by authorized and qualified technicians according the valid regulations for electrical installation.
2. Maintenance of the luminaires is limited to their surfaces. During maintenance no moisture can come into contact with any areas of the terminal connections or voltage control parts.
3. The electrical supply must be switched off at the outset, preferably by means of a switch in the distribution box, before any installation, maintenance or repair work is undertaken.
4. Exterior lighting must not be installed during rain.
5. Take account of the minimal separation distance from other objects and the room required around the fitting.
6. If in any doubt, consult a professional, taking local installation requirements into account. Some countries stipulate that lighting may be installed only by registered installers.
7. Clamping screws in electrical connections must be adequately tightened. This is particularly the case with 12V low voltage conductors.
8. Clean with a clean, dry cloth or brush, use no solvents or abrasives. Avoid dampness on all electrical components
9. Take account of all available technical information.
10. Meaning of symbols:

For indoor use only, where direct contact with water is impossible

IPXX This icon indicates the level of water-proof and dust-proof

Protection Class I: the fitting must be earthed

Protection Class II: the fitting is doubled insulated and does not require earthing

Protection Class III: the fitting is low voltage

0.5m Minimum distance from lighted objects (meters)

Max.ø50mm GU10 2Max.50W The type of lamp and maximum size and wattage indicated in each lighting unit must not be exceed; different items require different kind of light sources with different bulb icons

220-240V~ 50Hz The armature is designed to work only with the indicated voltage. Different items require different working voltage.

The luminaire can be used in combination with a dimmer

Light Angle 55° 35cm² The reference light angle and light space of the luminaire

This luminaire cannot be disposed together with normal domestic waste in standard rubbish can, but you have to bring it to a staging area for electrical waste

11. Take note of the symbols when connecting wires:

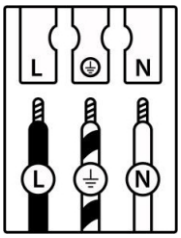

	(DE)	(GB)	(FR)	(NL)	(PL)	(NO)	(DK)
L	Stromführender Leiter	Live conductor	Conducteur	Spanning-voerende draad	Przewód prądowy	Strømførende leder	Strømførende leder
⏚	Schutzleiter	Earth conductor	Conducteur de protection (terre)	Aardkabel	Przewód uziemiający	Jordledningen	Jordledningen
N	Neutralleiter	Neutral conductor	Conducteur neutre	Nulleider	Przewód zerowy	Nøytralleder	Neutralleder

	(SE)	(FI)	(IT)	(ES)	(CZ)	(PT)	(GR)
L	Strömförande ledare	Virtajohdin	Conduttore sotto tensione	Conductor de corriente	Vodič pod napětím	Condutor vivo	Ρευματοφόρος αγωγός
⏚	Skyddsledare	Suojajohdin	Conduttore di terra	Conductor de protección	Ochranný vodič	Condutor de terra	Αγωγός γείωσης
N	Neutralledare	Nollajohdin	Conduttore neutro	Conductor neutro	Neutrální vodič	Condutor neutro	Ουδέτερος αγωγός

FittinQ B.V.
Smaragdweg 52, 5527 LB Hapert, The Netherlands
www.qazqa.nl

QAZQA