Instruction manual
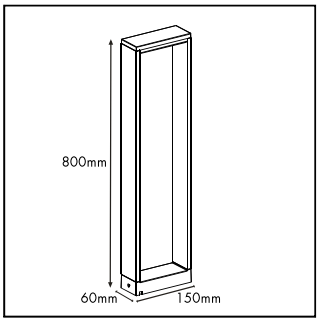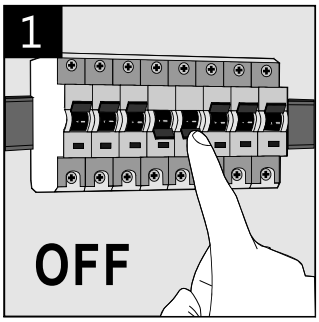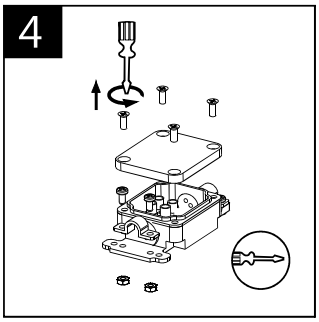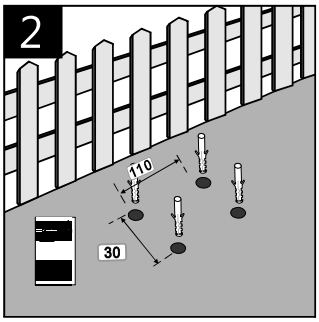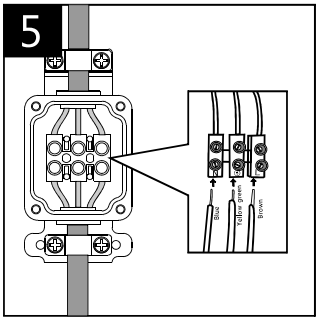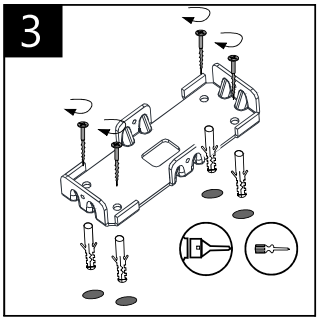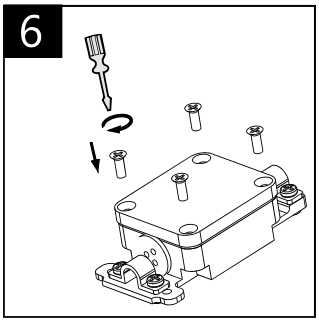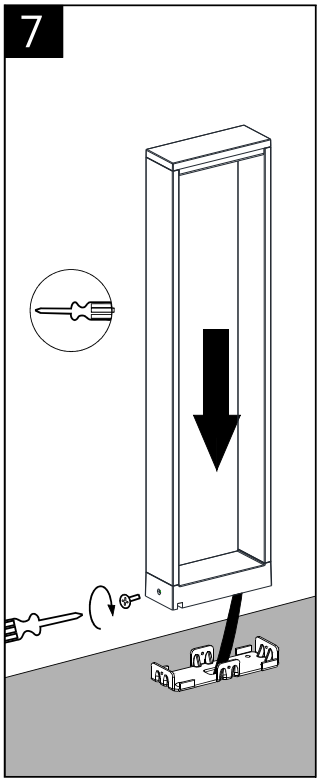
90781 — Frame FL 80 Silver Grey