WWW.QAZQA.COM

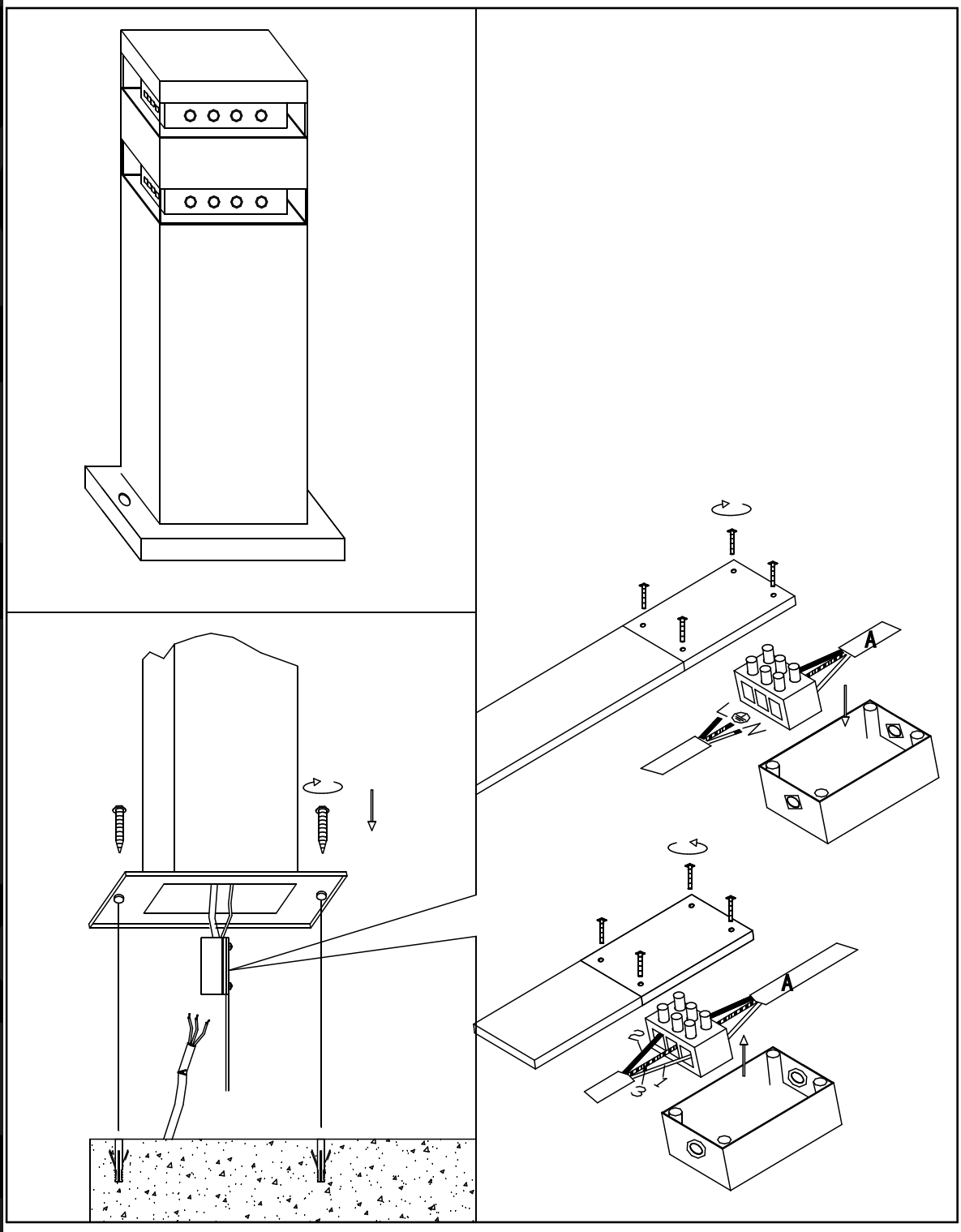

89499

IP44

QAZQA

WWW.QAZQA.COM

Instructions:

Follow the instructions for a correct and safe installation and use of this lamp!
Keep the instruction manual!

This product must be installed by a qualified electrician!

- Take care that the lamp is not plugged in before installation.
- Each installation has to be done according to the instructions. Refer to the manuals, in some cases it is necessary to contact the qualified electrician.
- Take care that every screw is fully screwed together!
- Before installation, take care of the colour coding: blue (N), brown (L), with protection class1, green/yellow (protection conductor).
- Always read the technical information on the package.

General information's:

- Keep the, by symbol shown, distance between the illuminated objects.
- Change broken protection glass immediately.
- **Protection Class I:** This lamp has protection conductor connection. It has to be connected to the grounded screw.
- **Protection Class II:** This lamp is double isolated and is not allowed to connect to the ground.
- **Protection Class III:** This lamp is only allowed to be connected to a low voltage source. (e.g.: 12V Transformer)
- Use heat resistant cables for a mains connection.
- X-Connection: In case of damage this conduction has to be changed.
- Y-Connection: In case of damage this conduction has to be changed by a qualified electrician.
- Z-Connection: The conductor is not allowed to be changed.
- MAX. …W: use only bulbs that are suitable for this lamp. The maximum of wattage you find on the packaging.
- This lamp can be used in combination with a dimmer. Except in use with LED or energy saving bulb. Ask an electrician for help in the selection of the correct dimmers.
- Take care that you do not damage other conductors while mounting the lamp.
- Conductors are not allowed to be crimped or revved.
- This lamp is made of materials which get hot in use.

This lamp is produced according to the strict regulations of the Safety Norm EN – 60 598

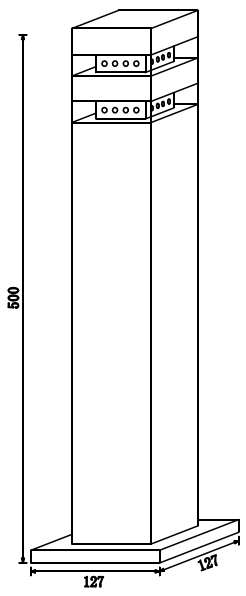

QAZQA