INSTRUCTION MANUAL

220~240V
50Hz

Max.
GU10
1xMax.10W

Max.
G9
1xMax.8W

IP20

Iconic Holt + Pulley Track Set 1-Phase Black + 3x Pendant + 2x Ceiling Light Beige



Contents:

X6	Track 50 cm
X1	Power feed-in
X3	End cap
X5	Straight connector
X2	L-connector
X1	T-connector
X1	X-connector
X3	Pendant for track
X2	Ceiling light for track (2x G9)

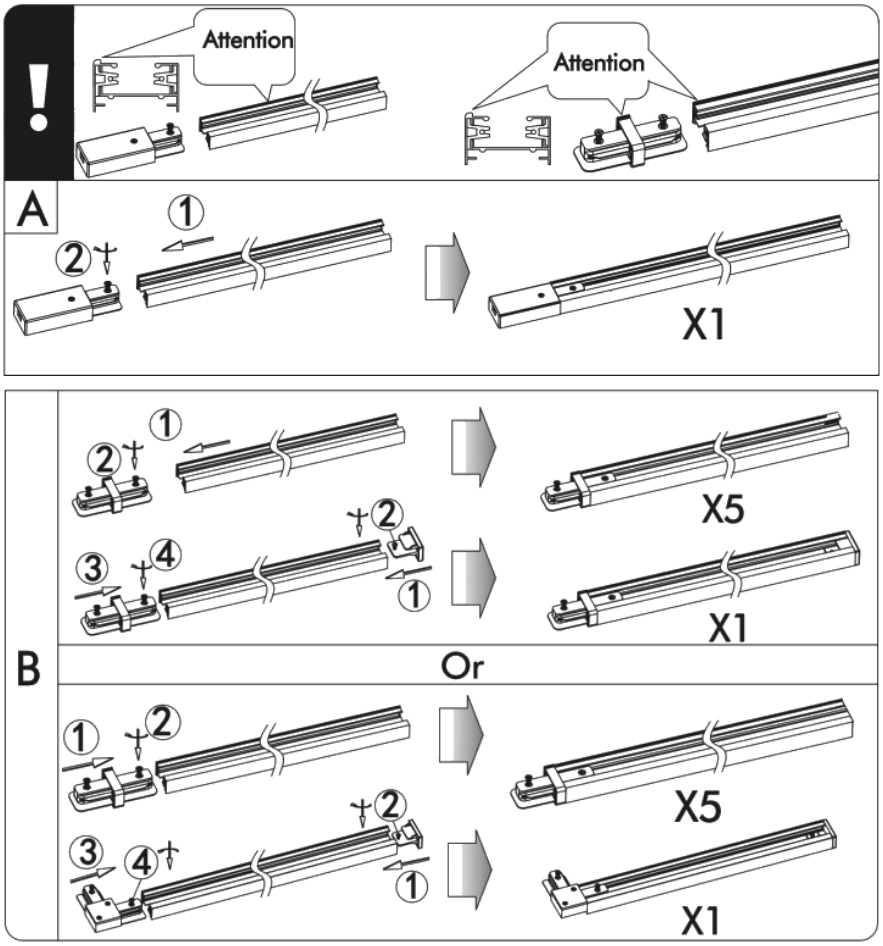

INSTRUCTION MANUAL

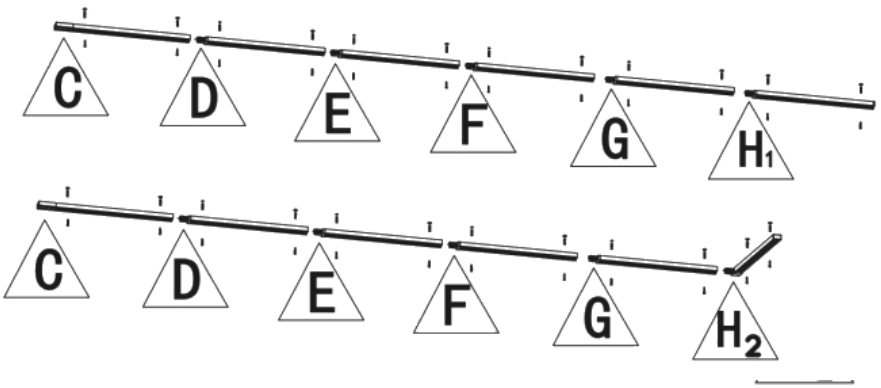

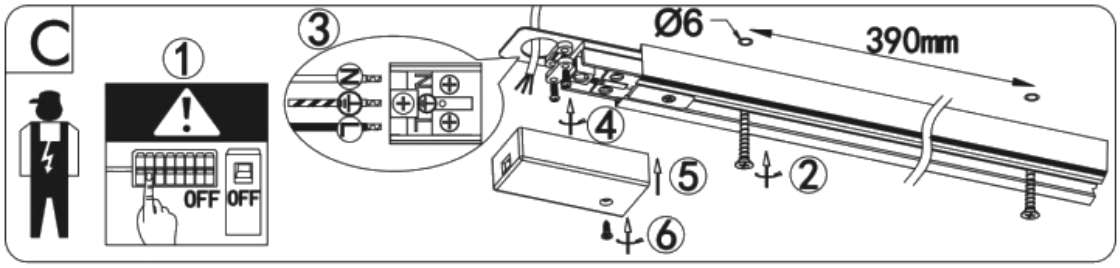

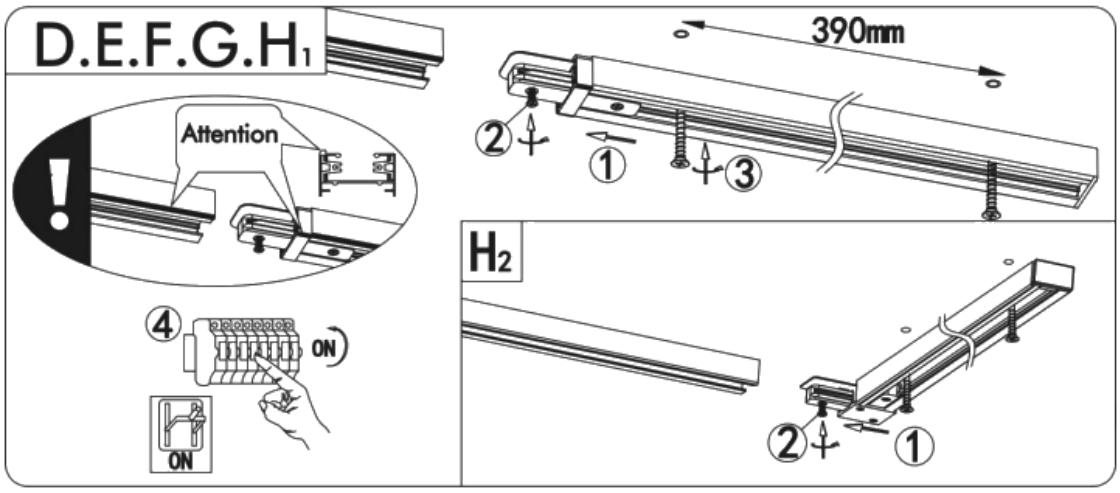

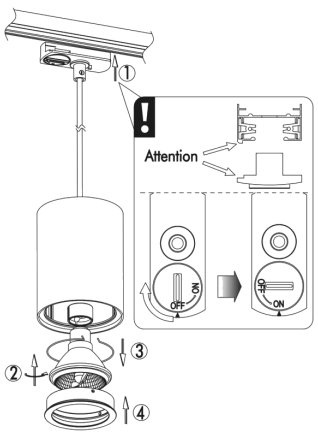

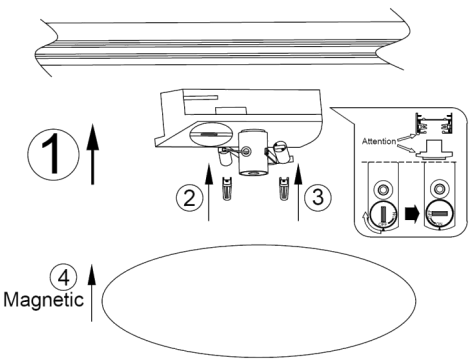

TO INSTALL:

1) Align arrows on the track adaptor with the polarity groove on the track.
2) Push up into track and rotate CLOCKWISE 90° while pulling back on the sliding cover until it locks into place.

TO REMOVE:

Hold the luminaire and gently pull down on the track adaptor and rotate ANTI-CLOCKWISE 90°.

SAFETY INSTRUCTION

Please study the instruction manual and below information carefully before installing or using this product.
Please keep this user manual for further reference

1. The luminaires may only be installed by authorized and qualified technicians according the valid regulations for electrical installation.
2. Maintenance of the luminaires is limited to their surfaces. During maintenance no moisture can come into contact with any areas of the terminal connections or voltage control parts.
3. The electrical supply must be switched off at the outset, preferably by means of a switch in the distribution box, before any installation, maintenance or repair work is undertaken.
4. Exterior lighting must not be installed during rain.
5. Take account of the minimal separation distance from other objects and the room required around the fitting.
6. If in any doubt, consult a professional, taking local installation requirements into account. Some countries stipulate that lighting may be installed only by registered installers.
7. Clamping screws in electrical connections must be adequately tightened. This is particularly the case with 12V low voltage conductors.
8. Clean with a clean, dry cloth or brush, use no solvents or abrasives. Avoid dampness on all electrical components
9. Take account of all available technical information.
10. Meaning of symbols:


For indoor use only, where direct contact with water is impossible



This icon indicates the level of water-proof and dust-proof


Protection Class I: the fitting must be earthed


Protection Class II: the fitting is doubled insulated and does not require earthing


Protection Class III: the fitting is low voltage



Minimum distance from lighted objects (meters)



The type of lamp and maximum size and wattage indicated in each lighting unit must not be exceed; different items require different kind of light sources with different bulb icons



The armature is designed to work only with the indicated voltage. Different items require different working voltage.


The luminaire can be used in combination with a dimmer



The reference light angle and light space of the luminaire


This luminaire cannot be disposed together with normal domestic waste in standard rubbish can, but you have to bring it to a staging area for electrical waste

11. Take note of the symbols when connecting wires:

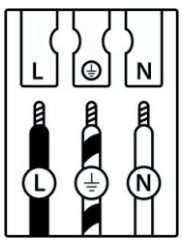

	(DE)	(GB)	(FR)	(NL)	(PL)	(NO)	(DK)
L	Stromführender Leiter	Live conductor	Conducteur	Spanning-voerende draad	Przewód prądowy	Strømførende leder	Strømførende leder
	Schutzleiter	Earth conductor	Conducteur de protection (terre)	Aardkabel	Przewód uziemiający	Jordledningen	Jordledningen
N	Neutralleiter	Neutral conductor	Conducteur neutre	Nulleider	Przewód zerowy	Nøytralleder	Neutralleder

	(SE)	(FI)	(IT)	(ES)	(CZ)	(PT)	(GR)
L	Strömförande ledare	Virtajohdin	Conduttore sotto tensione	Conductor de corriente	Vodič pod napětím	Condutor vivo	Ρευματοφόρος αγωγός
	Skyddsledare	Suojajohdin	Conduttore di terra	Conductor de protección	Ochranný vodič	Condutor de terra	Αγωγός γείωσης
N	Neutralledare	Nollajohdin	Conduttore neutro	Conductor neutro	Neutrální vodič	Condutor neutro	Ουδέτερος αγωγός

FittinQ B.V.
Smaragdweg 52, 5527 LB Hapert, The Netherlands
www.qazqa.nl

QAZQA