SAFETY INSTRUCTION

Please study the instruction manual and below information carefully before installing or using this product.
Please keep this user manual for further reference

1. The luminaires may only be installed by authorized and qualified technicians according the valid regulations for electrical installation.
2. Maintenance of the luminaires is limited to their surfaces. During maintenance no moisture can come into contact with any areas of the terminal connections or voltage control parts.
3. The electrical supply must be switched off at the outset, preferably by means of a switch in the distribution box, before any installation, maintenance or repair work is undertaken.
4. Exterior lighting must not be installed during rain.
5. Take account of the minimal separation distance from other objects and the room required around the fitting.
6. If in any doubt, consult a professional, taking local installation requirements into account. Some countries stipulate that lighting may be installed only by registered installers.
7. Clamping screws in electrical connections must be adequately tightened. This is particularly the case with 12V low voltage conductors.
8. Clean with a clean, dry cloth or brush, use no solvents or abrasives. Avoid dampness on all electrical components
9. Take account of all available technical information.
10. Meaning of symbols:

For indoor use only, where direct contact with water is impossible

IPXX This icon indicates the level of water-proof and dust-proof

Protection Class I: the fitting must be earthed

Protection Class II: the fitting is doubled insulated and does not require earthing

Protection Class III: the fitting is low voltage

0.5m Minimum distance from lighted objects (meters)

Max.ø50mm GU10 2Max.50W The type of lamp and maximum size and wattage indicated in each lighting unit must not be exceed; different items require different kind of light sources with different bulb icons

220-240V~ 50Hz The armature is designed to work only with the indicated voltage. Different items require different working voltage.

The luminaire can be used in combination with a dimmer

Light Angle 53° 35cm² The reference light angle and light space of the luminaire

This luminaire cannot be disposed together with normal domestic waste in standard rubbish can, but you have to bring it to a staging area for electrical waste

11. Take note of the symbols when connecting wires:

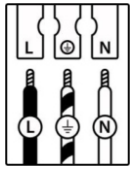

	(DE)	(GB)	(FR)	(NL)	(PL)	(NO)	(DK)
L	Stromführender Leiter	Live conductor	Conducteur	Spanning-voerende draad	Przewód prądowy	Strømførende leder	Strømførende leder
⏚	Schutzleiter	Earth conductor	Conducteur de protection (terre)	Aardkabel	Przewód uziemiający	Jordledningen	Jordledningen
N	Neutralleiter	Neutral conductor	Conducteur neutre	Nulleider	Przewód zerowy	Nøytralleder	Neutralleder

	(SE)	(FI)	(IT)	(ES)	(CZ)	(PT)	(GR)
L	Strömförande ledare	Virtajohdin	Conduttore sotto tensione	Conductor de corriente	Vodič pod napětím	Condutor vivo	Ρευματοφόρος αγωγός
⏚	Skyddsledare	Suojajohdin	Conduttore di terra	Conductor de protección	Ochranný vodič	Condutor de terra	Αγωγός γείωσης
N	Neutralledare	Nollajohdin	Conduttore neutro	Conductor neutro	Neutrální vodič	Condutor neutro	Ουδέτερος αγωγός

FittinQ B.V.
Smaragdweg 52, 5527 LB Hapert, The Netherlands
www.qazqa.nl

QAZQA

INSTRUCTION MANUAL

220~240V 50Hz | LED SMD 1x18.5W

Roar Fan 52 Satin LED
104015

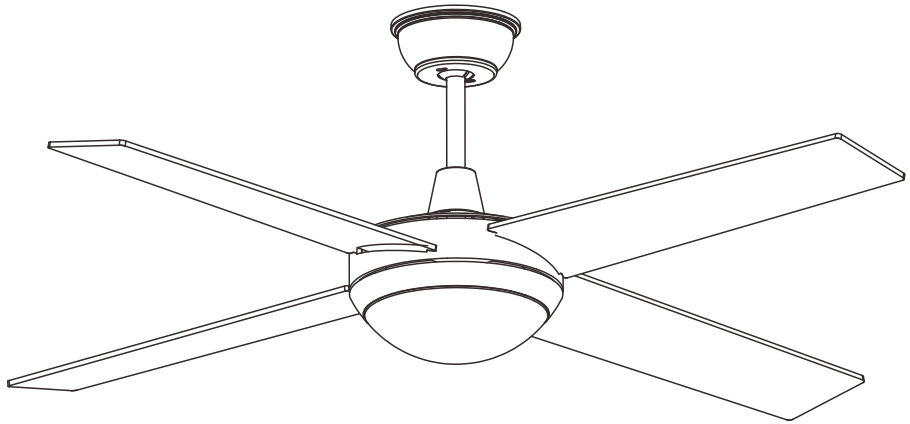

Ceiling Fan
incl.LED QL7001214
1900lm Module
1176/1318/1212lm Lamp
18.5W LED Module
18.5W Lamp
220-240V~50Hz
3000/4000/6500K
CRI>80
30000 h
15000 ON/OFF

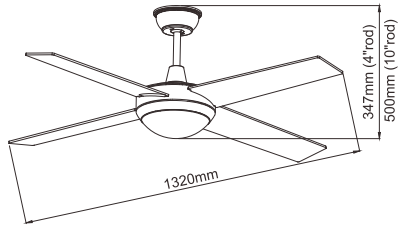

FittinQ B.V.
Smaragdweg 52, 5527 LB Hapert, The Netherlands
www.qazqa.nl

QAZQA

CONTENTS:

1.Safety precaution.....page2

2.Fan Structure Drawing.....page3

3.Installation Of Hanger Bracket.....page4

4.Installation Of Down Rod/Hanger Ball.....page5

5.Hanging Of Ceiling Fan.....page5

6.Wiring Of Ceiling Fan.....page6

7.Installation Of Canopy.....page6

8.Installation Of Fan Blade and Lightkit.....page7

9.Maintenance Tips.....page8

10.Ceiling Fan Remote Control Manual.....page9

11.LED Manual.....page10

12.Safety Instruction.....page11

104015

18.5W LED
incl. LED Board: QL7001214
220-240V~50Hz

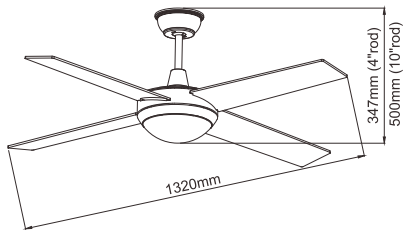

	QR	EAN
Dieses Produkt enthält eine Lichtquelle der Energieeffizienzklasse F This product contains a light source of energy efficiency class F Ce produit comprend une source de lumière de classe d'efficience énergétique F Dit product bevat een lichtbron van energie-efficiëntieklasse F Produkt ten zawiera źródło światła o klasie efektywności energetycznej F Dette produktet inneholder en lyskilde i energieffektivitetsklasse F Dette produkt indeholder en lyskilde af energieffektklasse F Denna produkt innehåller en ljuskälla i energieffektivitetsklass F Tämä tuote sisältää energiatehokkuusluokan F valonlähteen Questo prodotto contiene una sorgente luminosa della classe di efficienza energetica F Este producto contiene una fuente de luz de la clase de eficiencia energética F Tento výrobek obsahuje světelný zdroj třídy energetické účinnosti F Este produto contém uma fonte de luz da classe de eficiência energética F Αυτό το προϊόν περιέχει μια φωτεινή πηγή ενεργειακής απόδοσης κλάσης F Tento výrobok obsahuje zdroj svetla triedy energetickej efektivity F		8718881123504

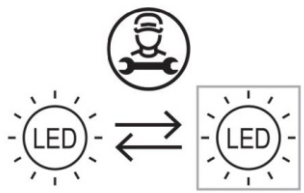

Durch einen Fachmann austauschbare Lichtquelle (nur LED)
Replaceable (LED only) light source by a professional.
Source de lumière remplaçable (LED uniquement) par un professionnel.
Lichtbron (alleen led) te vervangen door een professional.
Wymienne (tylko LED) źródło światła wykonane przez profesjonalistę.
Utskiftbar (kun LED) lyskilde av en profesjonell.
Udskiftelig lyskilde (kun LED), udskiftes af en elektriker.
Ljuskälla (endast LED) utbytbar genom fackman.
Ammattilainen voi vaihtaa vaihdettavan (vain LED) valonlähteen.
Sorgente luminosa (solo LED) sostituibile da un professionista.I
Fuente de luz (solo LED) sustituible por un profesional.
Vyměnitelný (pouze LED) světelný zdroj odborníkem.
Luz LED (apenas LED) substituível por um profissional.
Η πηγή φωτός (μόνο LED) να αντικαθίσταται από επαγγελματία.
Zdroj svetla (iba LED) vymeniteľný prostredníctvom odborníka.

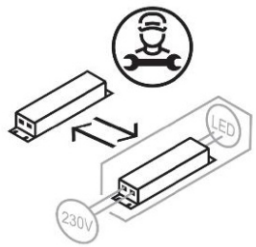

Durch einen Fachmann austauschbares Betriebsgerät.
Replaceable control gear by a professional.
Contrôleur remplaçable par un professionnel.
Voorschakelapparatuur te vervangen door een professional.
Wymienny układ sterujący przez profesjonalistę.
Utskiftbar kontrollutstyr av en profesjonell.
Udskiftelig igangsætter, udskiftes af en elektriker.
Styrdon utbytbart genom fackman.
Ammattilainen voi vaihtaa vaihdettavat ohjauslaitteet.
Dispositivo di controllo sostituibile da un professionista.
Dispositivo de control sustituible por un profesional.
Vyměnitelný předřadník odborníkem.
Dispositivo de controlo substituível por um profissional.
Ο εξοπλισμός ελέγχου να αντικαθίσταται από επαγγελματία.
Predradník vymeniteľný prostredníctvom odborníka.

CEILING FAN REMOTE CONTROL MANUAL

DIAGRAM OF TRANSMITTER

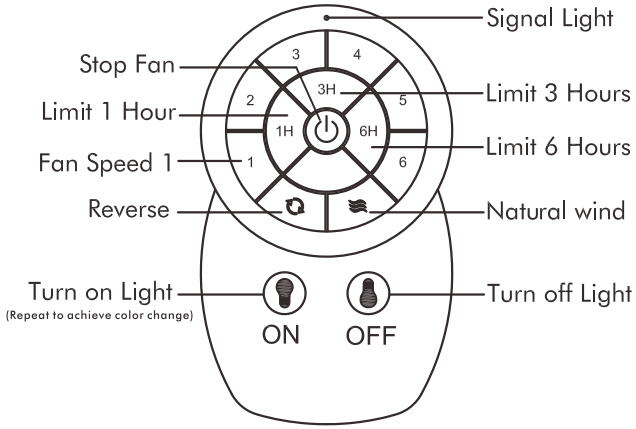

DIAGRAM OF RECEIVER

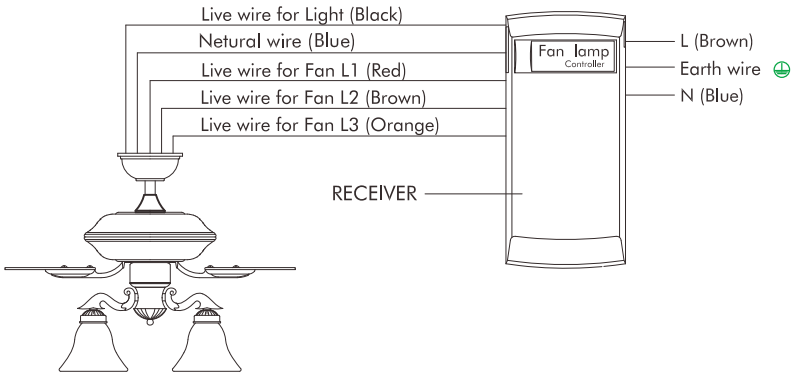

SAFETY PRECAUTION:

IMPORTANT:PLEASE READ BEFORE INSTALLATION

1.The installation work must be carried out by a qualified wiring installer.
2.Turn off the Electrical Main Switch at the circuit breaker fuse box.
3.Using power supply 220-240V/50Hz.
4.When mouting the fan,to ensure the safety cable is loop across the ceiling mounting "J" hook.
5.The ceiling mounting hook must be able to with hold a min.of 35 pounds.
6.The ceiling fan must be mounted at a min.height of 2.3meters of clearance from the floor.
7.Do not insert any objects in the path of the blades.
8.When all electrical connections are done,store all wires neatly.
9.Make sure all screws and connections are tightly screwed and secured.
10.The supply wires live and neutral must be connected to a double pole switch having a contact of at least 3min in all poles.

WARNING

TO REDUCE THE RISK OF PERSONAL INJURY,DO NOT BEND THE BLADES BRACKETS DURING ASSEMBLY OR AFTER INSTALLATION.
DO NOT INSERT ANY OBJECTS IN THE PATH OF THE BLADES.
TO REDUCE THE RISK OF SHOCK,THIS FAN MUST BE INSTALLED WITH AN ISOLATION WALL CONTROL/SWITCH.

FAN STRUCTURE DRAWING:

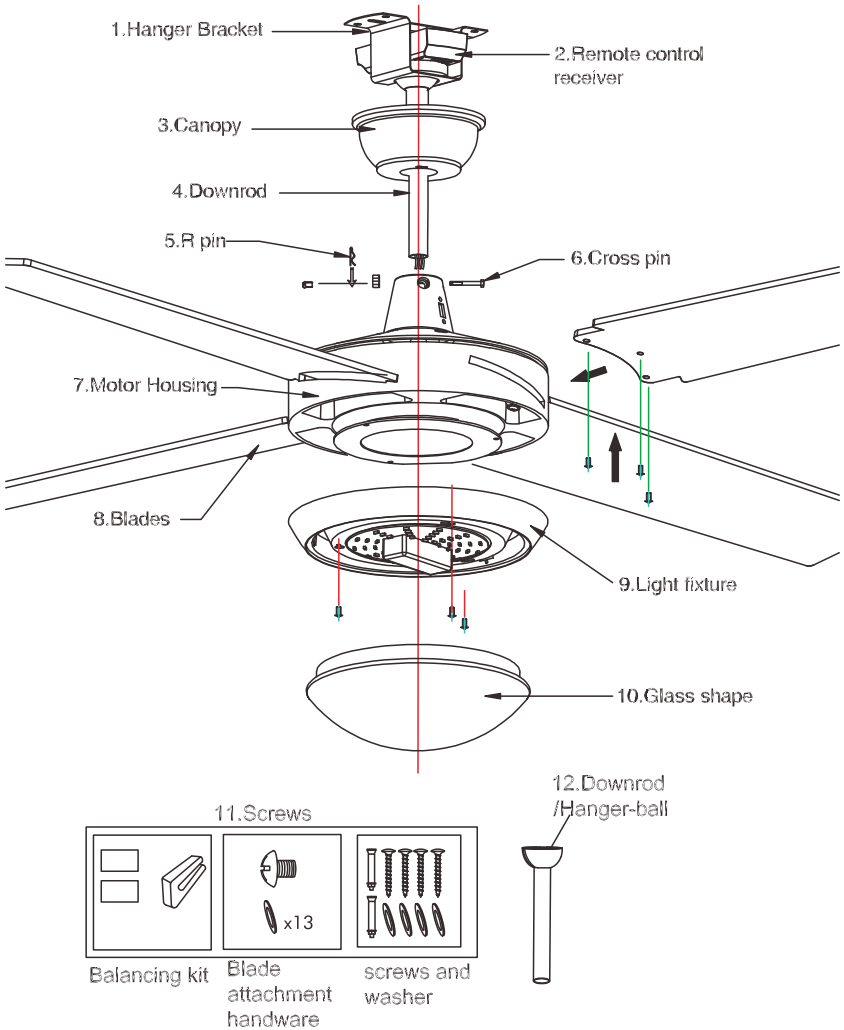

MAINTENANCE TIPS:

1. Because of the fan's natural movement,some connections may be loose. To check the support connections,brackets and blades attachments 2 times a year.Make sure they are all secured(It it not necessary to dismantle the entire fan from ceiling).
2. Clean your fan periodically to help maintain its appearance over the years.Do not use water when cleaning,use only a soft brush or lint-free cloth to avoid scratching the finish.The plating is coated with a lacquer to minimize the ratio of discoloration or tarnishing which would damage the motor or the wood or possibly cause an electric shock.
3. You can apply a light coat of furniture varnishing to the wood for additional protection and enhance its beauty.Surface scratched mark can be touch-up with a light coat of shoe polish.
4. There is no need to oil your fan.The motor is created with lubricated sealed ball bearings.

WARNING

MAKE SURE THE POWER IS SWITCH OFF AT THE ELECTRICAL PANEL BOX BEFORE YOU ATTEMPT TO ANY REPAIRS(REFER TO THIS SECTION),MAKING ELECTRICAL CONNECTIONS.

INSTALLATION OF FAN BLADE AND LIGHTKIT:

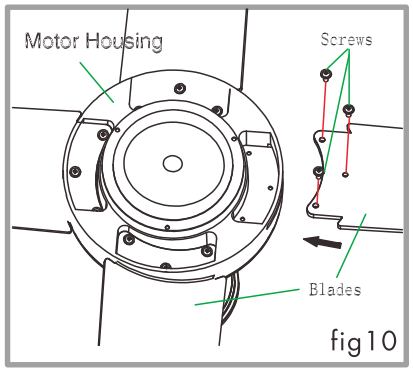

fig10

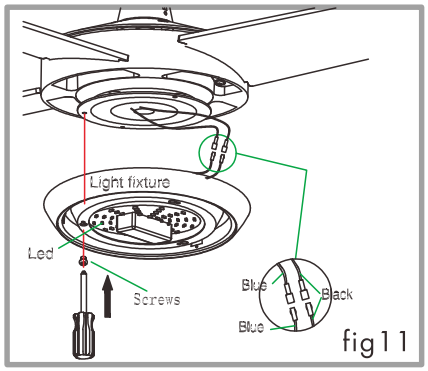

fig11

1) Remove the blade screws from the motor. Attached the blades to the motor and tighten the screws firmly.

2) Remove one screw from the motor connection strap, unscrew the other screws out 3-4mm. Put the lamp panel to the motor and fasten the three screws .(The two light wires must pass through the center of the light fixture) .

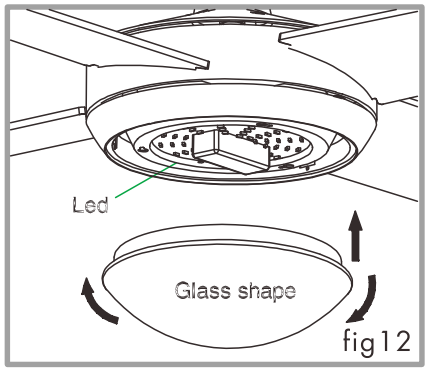

fig12

3) Put the LED (with magnet) onto the lamp panel, connect the wire : Blue to Blue, Black to Black. (fig 11)

4)Carefully lift the glass by pushing up to light fixture and twist clockwise until it is held tightly in place by the three tabs.

INSTALLATION OF HANGER BRACKET:

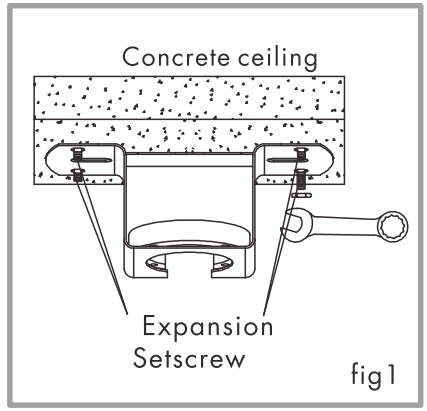

fig1

1)To use two Expansion Setscrew to install the hanger bracket firmly.

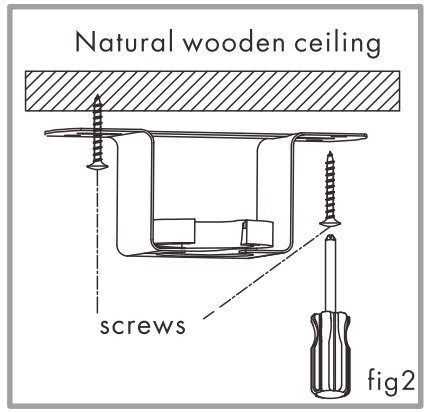

fig2

2)To use four long screws to install the hanger firmly.

INSTALLATION OF DOWNROD/HANGER BALL:

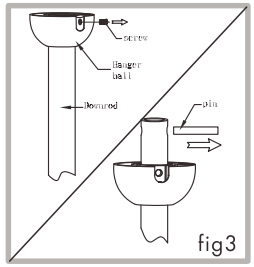

fig3

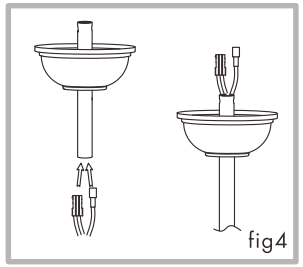
fig4

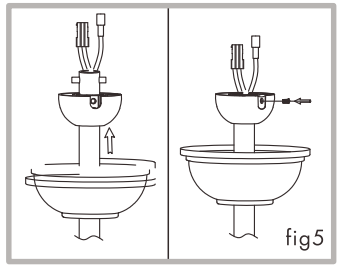
fig5

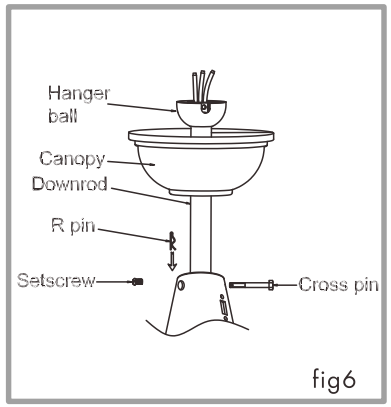

fig6

1.Remove the screw and bolt from the hanger ball as fig 3;Remove the "R" pin and cross pin from the downrod.

No e: The downrod with hanger ball is 4 inch ,if it's not enough ,please use the 10 inch rod before next step.

2.Put the canopy into the downrod,then thread the wire through the downrod.
3.Install back the screws and bolt to the hanger ball ,ensure to fasten the screws.
4.Insert the downrod into the connector,loosen the two setscrews in the downrod support.Install back the cross pin and secured with the "R" pin.Fasten back the two setscrews .
5.The "R" pin must be properly installed to prevent the cross pin from working loose.

HANGING OF CEILING FAN:

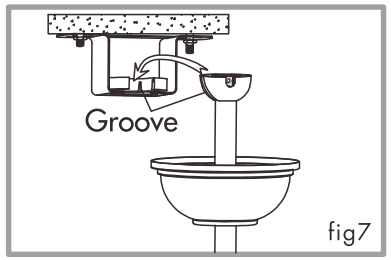

fig7

1.Carefully lift the fan and assembly into hanger bracket which is attached to the outlet box.

2.Ensure the rod ball's groove is lined up with tab on the hanger bracket.

WIRING OF CEILING FAN:

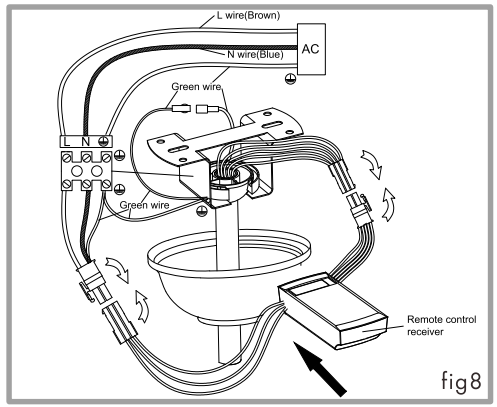

fig8

Total six color of wires connected from the top of the motor:

* Red: Live wire for fan(L1)
* Brown: Live wire for fan(L2)
* Orange: Live wire for fan(L3)
*Black :Live wire for light
*Blue:Neutral wire
*Yellow&Green:Earth wire

1)Connect the bracket singl male end(yellow&green wire)to the motor single female end(yellow&green).
2)Connect the remote control output 6 female end to the motor 6 male end.
3)Connect the remote control input 4 female end to the bracket output 4 male end.

NOTE:ALL THE MALE END AND FEMALE END MUST BE CONNECTED WELL TO ENSURE THE MOTOR AND REMOTE CONTROL WORK NORMALLY.

INSTALLATION OF CANOPY:

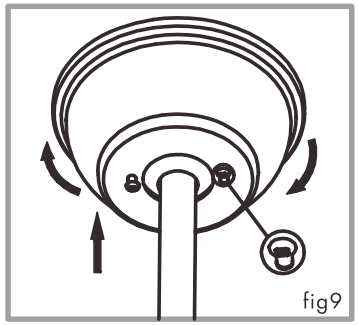
fig9

1)After done up the wiring,attach canopy to the hanger bracket by pushing up and twist to locate screws in the two key holes.

2)Tighten the two screws firmly. (fig 9)