INSTRUCTION MANUAL

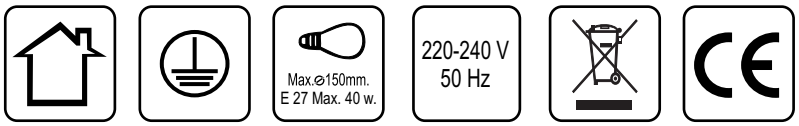

Arti Wire HL Satin 48

103438

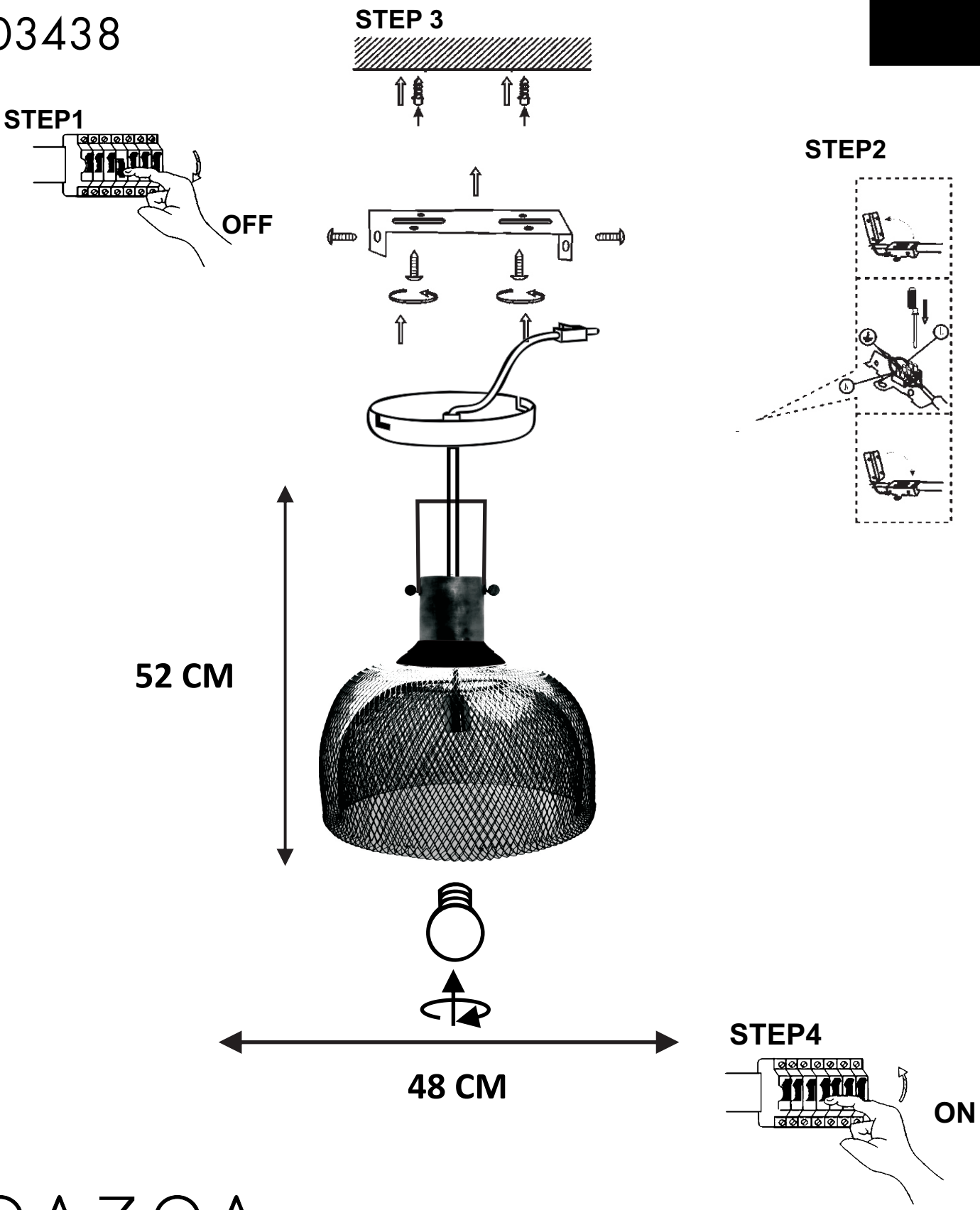

QAZQA

WWW.QAZQA.COM

SAFETY DIRECTIONS

Please study the instruction manual and below information carefully before installing or using this product. Please keep this user manual for further reference

1. The luminaires may only be installed by authorized and qualified technicians according the valid regulations for electrical installation.
2. Maintenance of the luminaires is limited to their surfaces. During maintenance no moisture can come into contact with any areas of the terminal connections or voltage control parts.
3. The electrical supply must be switched off at the outset, preferably by means of a switch in the distribution box, before any installation, maintenance or repair work is undertaken.
4. Exterionlighting must not be installed during rain.
5. Take account of the minimal separation distance from other objects and the room required around the fitting.
6. If in any doubt, consult a professional, taking local installation requirements into account. Some countries stipulate thet lighting may be installed only by registered installers.
7. Clamping screws in electrical connections must be adequately tightened. This is particularly the case with 12V low voltage conductors.
8. When replacing a halogen lamp, wait for it to cool, for a minimum of 5 minutes.
9. Clean with a clean, dry cloth or brush, use no solvents or abrasives. Avoid dampness on all electrical components.
10. Take account of all available technical information.
11. Take note of the symbols when connecting wires:

    N = Neutral L =Live ⏚ = Earth

12. Meaning of symbols:

For indoor use only, where direct contact with water is impossible

IPXX This icon indicates the level of water-proof and dust-proof

Protection class I: the fitting must be earthed

Protection class II: the fitting is double insulated and does not require earthing

Protection class III: the fitting is low voltage

0.5m minimum distance from lighted objects (meters)

Only the self-screening halogen Lamp shouid be used with the luminaire

8mm Strip the wire to the indicated length (mm);different items require different length

3x min.0.75mm Connect using the specified cable; different itens requier different cables

the type of lamp and maximum size and wattage indicated in each lighting unit must not be exceed; different items require different kind of light sources with different bulb icons

220 ~240V 60-60HZ This armature is designed to work only with the indicated voltage different items require different working voltage.

The armature can be used in combination with a dimmer.

The reference light angle and space of the luminaire

This luminaire cannot be disposed together with normal domestic waste in standard rubbish Can but you have to bring it to a staging area for electrical waste

QAZQA

WWW.QAZQA.COM