INSTRUCTION MANUAL

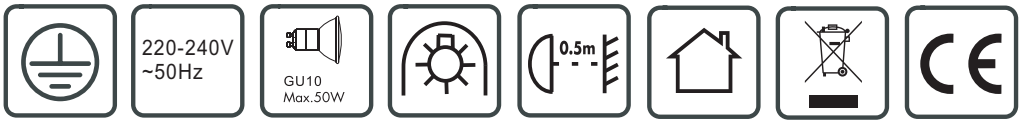
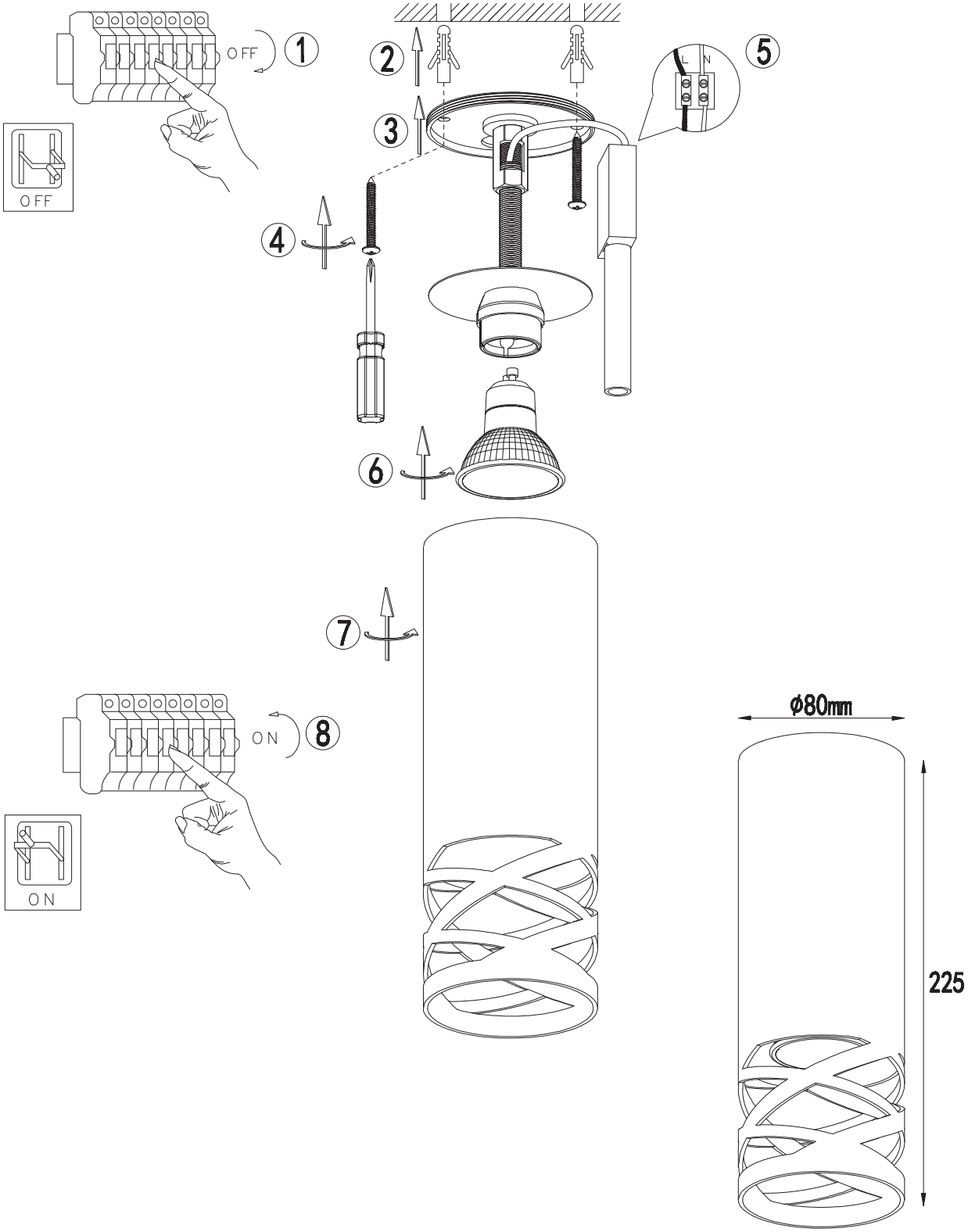
Arre HL